www.CrowderSupply.com • Toll Free: 888-883-5144

Chicago Pneumatic

Spare parts list

Hydraulic breakers

RX 4

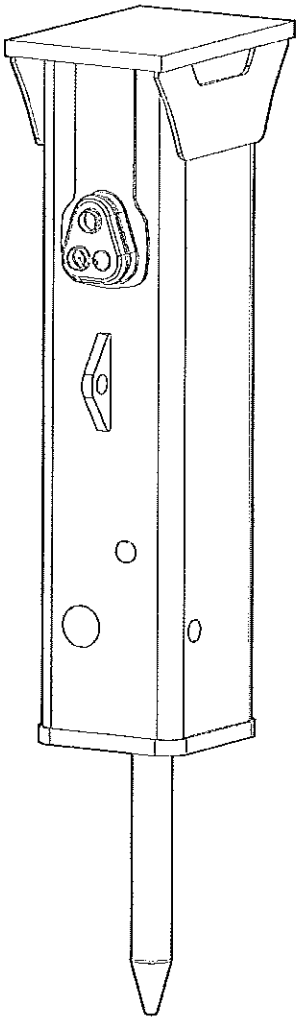

CROWDER SUPPLY CO, INC., 8495 ROSLYN ST., COMMERCE CITY, CO 80022 * TOLL FREE: 888-883-5144 * WWW.CROWDERSUPPLY.COM

www.CrowderSupply.com • Toll Free: 888-883-5144

Spare parts list

Hydraulic breaker

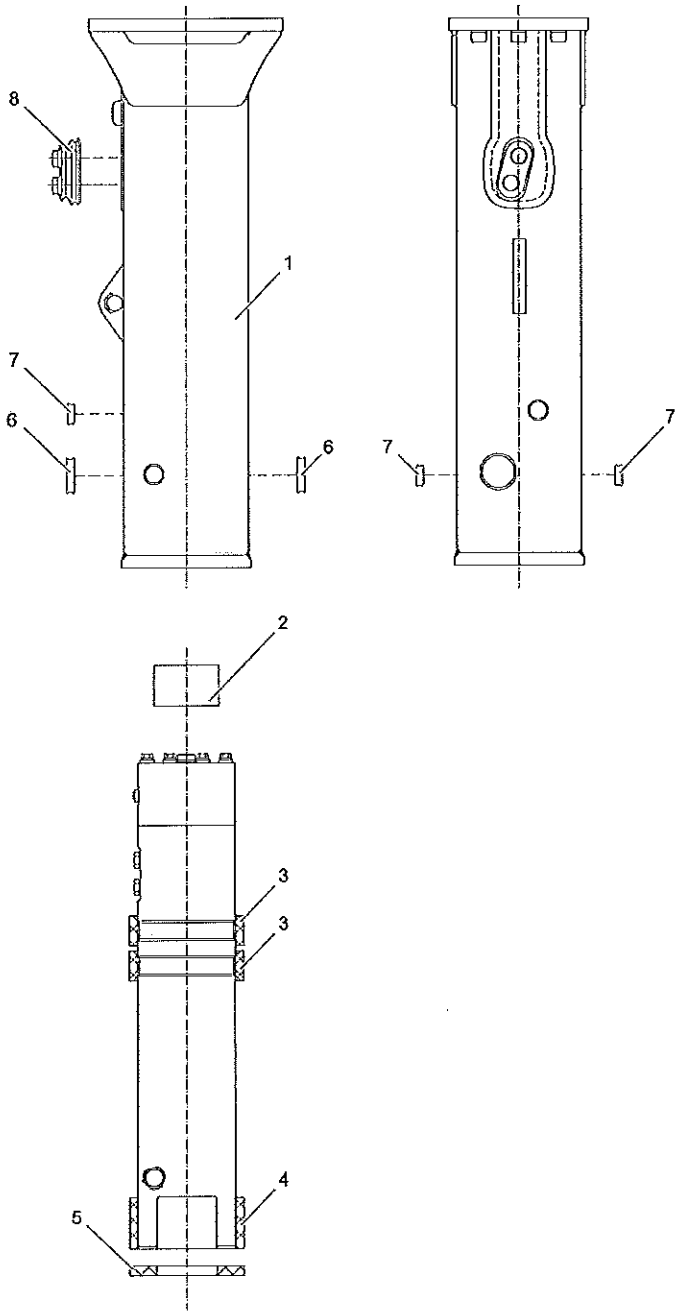

CROWDER SUPPLY CO, INC., 8495 ROSLYN ST., COMMERCE CITY, CO 80022 * TOLL FREE: 888-883-5144 * WWW.CROWDERSUPPLY.COM

www.CrowderSupply.com • Toll Free: 888-883-5144

No.	Description	Remark	Quantity	Part number
1	Breaker box		1	3362 1300 02
2	Elastic pad		1	3362 4910 05
3	Guide plate		2	3362 4300 03
4	Guide plate		1	3362 4300 02
5	Shock absorber		1	3362 4300 01
6	Plug		2	3362 4910 07
7	Plug		3	3362 4910 04
8	Cover		1	3362 4910 06

CROWDER SUPPLY CO, INC., 8495 ROSLYN ST., COMMERCE CITY, CO 80022 * TOLL FREE: 888-883-5144 * WWW.CROWDERSUPPLY.COM

www.CrowderSupply.com • Toll Free: 888-883-5144

Percussion unit

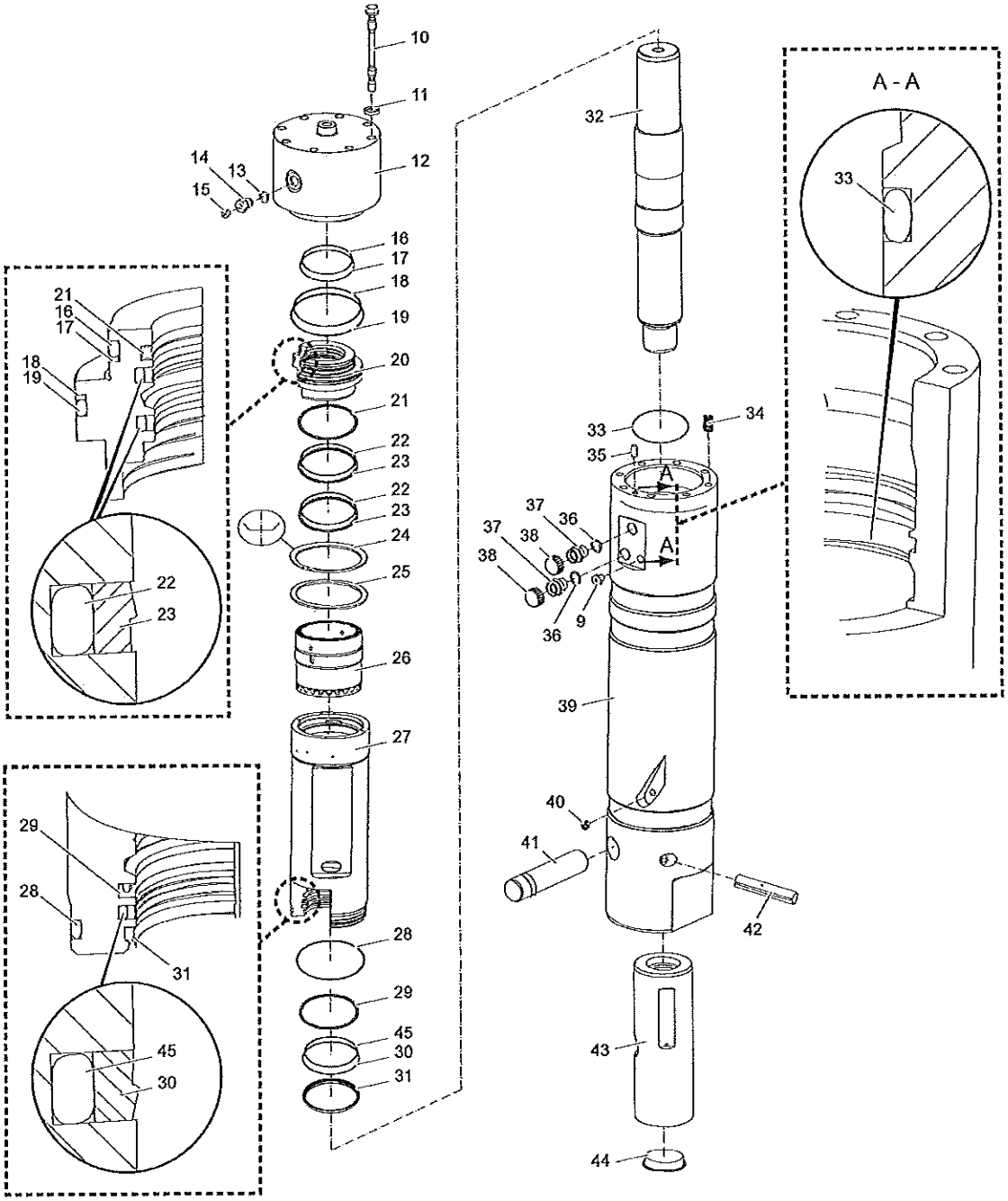

CROWDER SUPPLY CO, INC., 8495 ROSLYN ST., COMMERCE CITY, CO 80022 * TOLL FREE: 888-883-5144 * WWW.CROWDERSUPPLY.COM

www.CrowderSupply.com • Toll Free: 888-883-5144

No.	Description	Remark	Quantity	Part number
9	Plug		1	3363 0669 63
10	Bolt		10	3361 1910 06
11	Washer		10	3361 1910 07
12	Cover		1	3361 1300 07
13	O-ring		1	0663 9251 00
14	Filling valve		1	3363 0872 86
15	Threaded plug		1	3360 4784 26
16	O-ring	81.92 x 5.33 mm 3.23 x 0.21 in.	1	3361 1920 04
17	Back-up ring	83.13 x 4.65 mm 3.27 x 0.18 in.	1	3361 1920 34
18	Back-up ring	108.66 x 4.65 mm 4.28 x 0.18 in.	1	3361 1920 36
19	O-ring	107.32 x 5.33 mm 4.23 x 0.21 in.	1	3361 1920 35
20	Seal bush		1	3361 1300 03
21	Seal	56.69 x 5.33 mm 2.23 x 0.21 in.	1	3361 1920 31
22	O-ring	62.87 x 5.33 mm 2.48 x 0.21 in.	2	3361 1920 33
23	Seal		2	3361 1920 32
24	Plate spring		1	3361 1300 04
25	Spacer		1	3361 1300 05
26	Control valve		1	3361 1301 06
27	Cylinder bush		1	3361 1300 02
28	O-ring	104.14 x 5.33 mm 4.10 x 0.21 in.	1	3361 1920 05
29	Seal	60 x 75.5 x 6.3 mm 2.36 x 2.97 x 0.25 in.	1	3361 1920 38
30	Seal	60 x 6.3 mm 2.36 x 0.25 in.	1	3361 1920 39
31	Wiper	60 x 68 x 4 x 7 mm 2.36 x 2.68 x 0.16 x 0.28 in.	1	3361 1920 41
32	Piston		1	3315 3327 00
33	Seal	Ø 118 mm Ø 4.65 in.	1	3315 2966 15
34	Threaded insert		10	3363 0702 31
35	Dowel pin		1	3363 0702 32
36	O-ring	19.18 x 2.46 mm 0.76 x 0.10 in.	2	3361 1920 67
37	Fitting		2	3361 0314 76
38	Cap		2	3361 3534 86
39	Housing		1	3361 1300 08
40	Grease nipple		1	0544 2153 00
41	Retainer pin		1	3361 1300 10
42	Split pin		1	3363 0838 52
43	Wear bush		1	3361 1300 09
44	Cap		1	3362 2632 90
45	O-ring	66.04 x 5.33 mm 2.60 x 0.21 in.	1	3361 1920 40

CROWDER SUPPLY CO, INC., 8495 ROSLYN ST., COMMERCE CITY, CO 80022 * TOLL FREE: 888-883-5144 * WWW.CROWDERSUPPLY.COM

www.CrowderSupply.com • Toll Free: 888-883-5144

Tightening torques

No.	Description	Tightening torque	Remark
9	Plug	30 Nm	
10	Bolt		1. Pretighten the bolts to 25 Nm, proceeding in a crosswise fashion, 2. then tighten each bolt through 30° in a crosswise fashion, 3. finally tighten each bolt again through 30° in a crosswise fashion.
14	Filling valve	130 Nm	
15	Threaded plug	20 Nm	
37	Fitting	90 Nm	
40	Grease nipple	20 Nm	

CROWDER SUPPLY CO, INC., 8495 ROSLYN ST., COMMERCE CITY, CO 80022 * TOLL FREE: 888-883-5144 * WWW.CROWDERSUPPLY.COM

www.CrowderSupply.com • Toll Free: 888-883-5144

Working tools

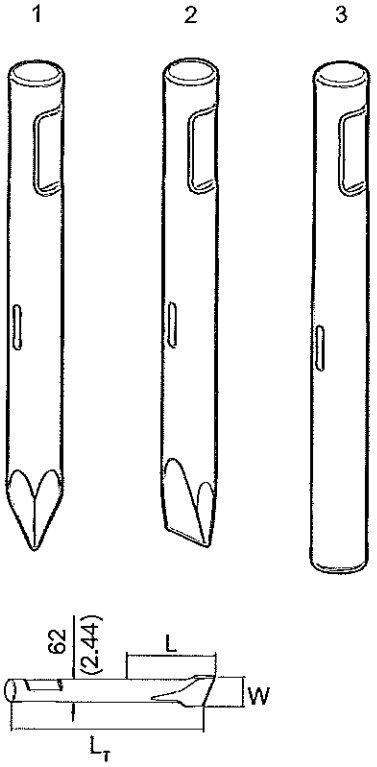

Metric

No.	Description	W (mm)	L (mm)	L_T (mm)	Wt (kg)	Part number
1	Moil point (conical)	-	350	590	12.6	4211 1052 01
2	Chisel (cross)	62	350	590	13.2	4211 1052 02
3	Blunt tool	-	350	590	13.6	4211 1052 03

Imperial

No.	Description	W (in.)	L (in.)	L_T (in.)	Wt (lb)	Part number
1	Moil point (conical)	-	13.78	23.23	27.9	4211 1052 01
2	Chisel (cross)	2.44	13.78	23.23	29.0	4211 1052 02
3	Blunt tool	-	13.78	23.23	30.1	4211 1052 03

CROWDER SUPPLY CO, INC., 8495 ROSLYN ST., COMMERCE CITY, CO 80022 * TOLL FREE: 888-883-5144 * WWW.CROWDERSUPPLY.COM

www.CrowderSupply.com • Toll Free: 888-883-5144

Accessories

Hydraulic hoses

Description	Remark	Quantity	Part number
Hose	I.D. 15 (0.59 in.), both ends 18 L (M 26 x 1.5) conical seal 24°, length 1500 mm (59 in.)	2	3363 4910 02

Optional equipment

Description	Remark	Quantity	Part number
Chisel paste	500 g (1.1 lbs) (carton of 30 pieces)	1	3363 0949 10
Grease gun		1	3363 0345 67
Service box with nitrogen cylinder	2 l 0.44 gal (0.53 US gal)	1	3363 4910 04
Test gauge wear bush		1	3315 3037 00
Adapter plate matching the carrier	Consult the Chicago Pneumatic Customer Center/Dealer in your area.	1	-
Base plate		1	3363 0997 01
Bolt kit		1	3363 1065 08
Allen key	14 mm for bolt kit	1	3360 2049 63
Open end spanner	size 30/32 for bolt kit	1	3360 1195 81

CROWDER SUPPLY CO, INC., 8495 ROSLYN ST., COMMERCE CITY, CO 80022 * TOLL FREE: 888-883-5144 * WWW.CROWDERSUPPLY.COM

www.CrowderSupply.com • Toll Free: 888-883-5144

Kits

Seal kit

Description	Remark	Quantity	Part number
Seal kit		1	3361 1300 11
O-ring		1	-
Threaded plug		1	-
Seal	56.69 x 5.33 mm 2.23 x 0.21 in.	1	-
Seal		2	-
O-ring	62.87 x 5.33 mm 2.48 x 0.21 in.	2	-
O-ring	81.92 x 5.33 mm) 3.23 x 0.21 in.	1	-
Back-up ring	83.13 x 4.65 mm (90 shore) 3.27 x 0.18 in. (90 shore)	1	-
O-ring	107.32 x 5.33 mm (90 shore) 4.23 x 0.21 in. (90 shore)	1	-
Back-up ring	108.66 x 4.65 mm (90 shore) 4.28 x 0.18 in. (90 shore)	1	-
Seal	Ø 118 mm Ø 4.65 in.	1	-
O-ring	104.14 x 5.33 mm (90 shore) 4.10 x 0.21 in. (90 shore)	1	-
Seal	60 x 75.5 x 6.3 mm 2.36 x 2.97 x 0.25 in.	1	-
Seal	60 x 6.3 mm 2.36 x 0.25 in.	1	-
O-ring	66.04 x 5.33 mm 2.60 x 0.21 in.	1	-
Wiper	60 x 68 x 4 x 7 mm 2.36 x 2.68 x 0.16 x 0.28 in.	1	-
O-ring	19.18 x 2.46 mm (70 shore) 0.76 x 0.10 in. (70 shore)	2	-

Label kit

Description	Remark	Quantity	Part number
Label kit		1	3315 3858 90

CROWDER SUPPLY CO, INC., 8495 ROSLYN ST., COMMERCE CITY, CO 80022 * TOLL FREE: 888-883-5144 * WWW.CROWDERSUPPLY.COM

www.CrowderSupply.com • Toll Free: 888-883-5144

Dimensions

mm (inch)

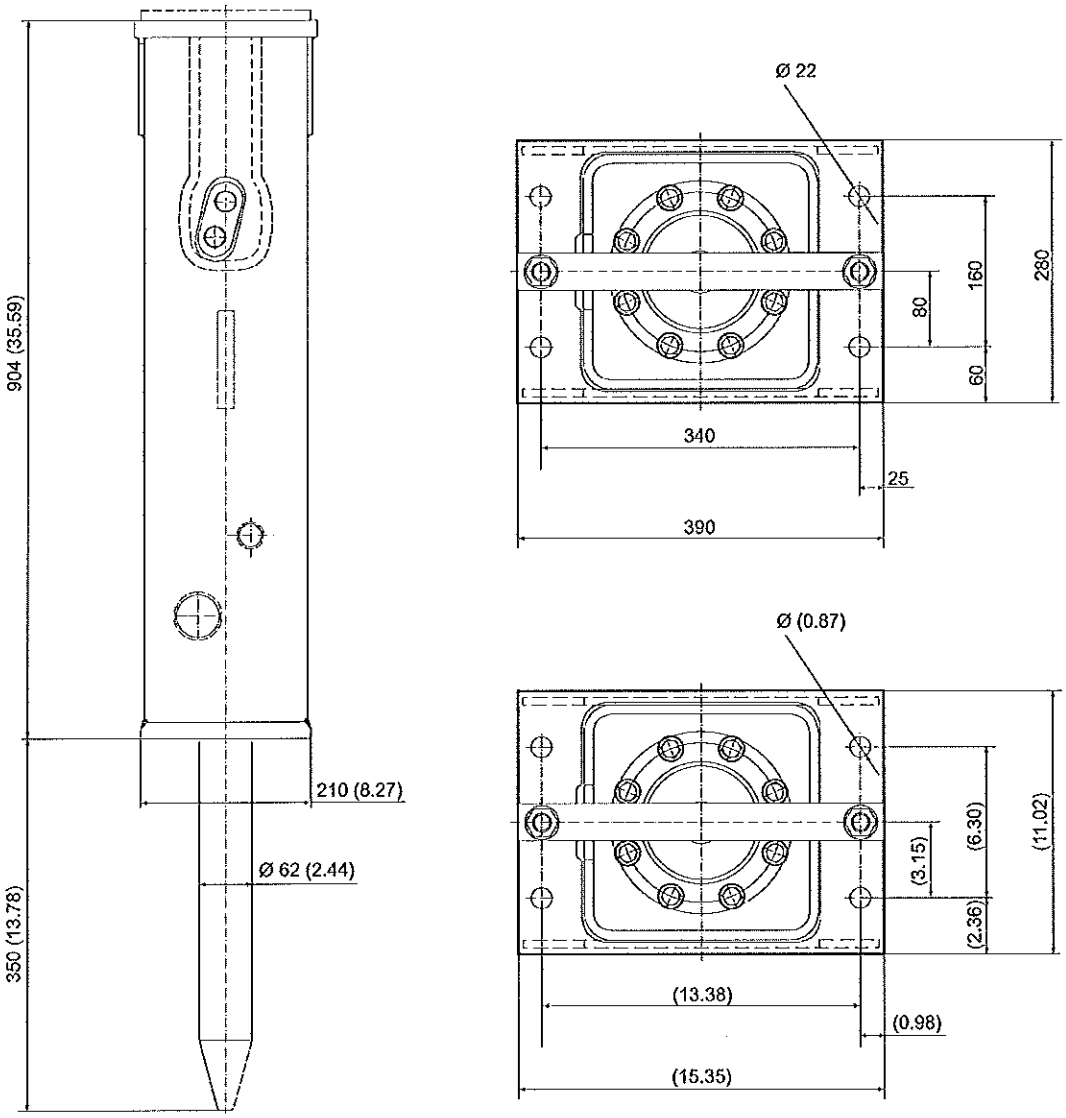

CROWDER SUPPLY CO, INC., 8495 ROSLYN ST., COMMERCE CITY, CO 80022 * TOLL FREE: 888-883-5144 * WWW.CROWDERSUPPLY.COM